अर्किओन
INTERNATIONAL INSTITUTE OF MEDICAL SCIENCE & TECHNOLOGY COUNCIL

A Mini Project Report on

LDR BASED AUTOMATIC NIGHT LIGHT SYSTEM

Submitted by : **COHORT – 02**

Awad Zuhair (1HK22EC019)

Anush Franklyn F (1RG22EC003)

Keerthana G (4VM22EC024)

Manoj T (1AM22EC060)

Mohammed Maaz (1HK22EC094)

Murugesh M R (1AM22EC067)

Neha Metri (1BI22ET032)

Raphael J S (1RG22EC028)

Sanjana Balaramsingh Hajeri (1BI22ET043)

Shrinath D Pol (4AD23EC409)

Sushankitha S (1BI22ET053)

Tejashwini N M (4VM22EC053)

Vidya Sagar T J (1KI22EC118)

ABSTRACT

The LDR Based Automatic Night Light System is an energy-efficient lighting control system designed to automatically operate lights based on the surrounding light intensity. The system uses a Light Dependent Resistor (LDR) as a light sensor to detect changes in environmental illumination. The resistance of the LDR varies depending on the amount of light falling on it, which enables the circuit to differentiate between daytime and nighttime conditions.

In this project, the LDR is connected with a resistor to form a voltage divider network**,** which controls the base voltage of an NPN transistor (BC817-40)**.** The transistor acts as an electronic switch that controls the operation of an LED through a current-limiting resistor. During daytime, when sufficient light falls on the LDR, its resistance decreases, preventing the transistor from turning ON and keeping the LED OFF. During night time or low-light conditions, the resistance of the LDR increases, allowing sufficient base voltage to turn the transistor ON, which enables current to flow through the LED and causes it to glow.

The circuit was designed using KiCad electronic design software, where the schematic diagram was created, component footprints were assigned, and the PCB layout was developed. This project demonstrates a simple and cost-effective solution for automatic lighting control.

The system supports Sustainable Development Goal 7 (Affordable and Clean Energy) by reducing unnecessary energy consumption. Since the lighting system operates only when the ambient light level is low, it prevents lights from remaining ON during daytime, thereby minimizing power wastage. Such automatic lighting systems can be widely used in street lighting, garden lighting, and outdoor security systems**,** contributing to improved energy efficiency and sustainable energy usage.

INTRODUCTION

Automatic lighting systems play an important role in energy conservation and smart energy management**.** In many places such as streets, gardens, and corridors, lights are often left ON during daytime, which leads to unnecessary power consumption.

To solve this problem, an automatic night light system using an LDR can be implemented. The LDR senses the surrounding light intensity and controls the lighting accordingly. When the light level decreases, the system automatically turns ON the light source, and when sufficient light is present, the system turns the light OFF.

This project demonstrates the design and implementation of an LDR-based automatic night light system using simple electronic components. The circuit is simulated and designed using KiCad software**,** and a PCB layout is generated for practical implementation.

Objectives of the Project

The main objectives of this project are,

1. To design and develop an automatic night light system using an LDR sensor.
2. To understand the working principle of a Light Dependent Resistor (LDR) and its application in light sensing circuits.
3. To implement a transistor-based switching **circuit** for controlling an LED.
4. To design the circuit schematic using KiCad electronic design software.
5. To develop a PCB layout for the designed circuit.
6. To create an energy-efficient lighting system that helps reduce unnecessary power consumption.

System Overview

The LDR Based Automatic Night Light System is designed to automatically control a light source depending on the surrounding light intensity. The system uses a Light Dependent Resistor (LDR) as the sensing element to detect the ambient light level and control the operation of an LED.

The circuit mainly consists of an LDR, two resistors (R1 and R2), an NPN transistor (BC817-40), and an LED. The LDR senses the light intensity in the environment and changes its resistance accordingly. This change in resistance is used to control the base voltage of the transistor.

The transistor acts as an electronic switch that controls the flow of current through the LED. When the surrounding light intensity is high, the resistance of the LDR becomes low, preventing the transistor from turning ON, and the LED remains OFF. When the surrounding light intensity decreases, the resistance of the LDR increases, which allows the transistor to turn ON and the LED to glow.

The circuit operates using a DC power supply, and the LED acts as the output indicator representing the night light. The system provides a simple and effective method for automatic lighting control and helps in reducing unnecessary energy consumption.

CIRCUIT DIAGRAM

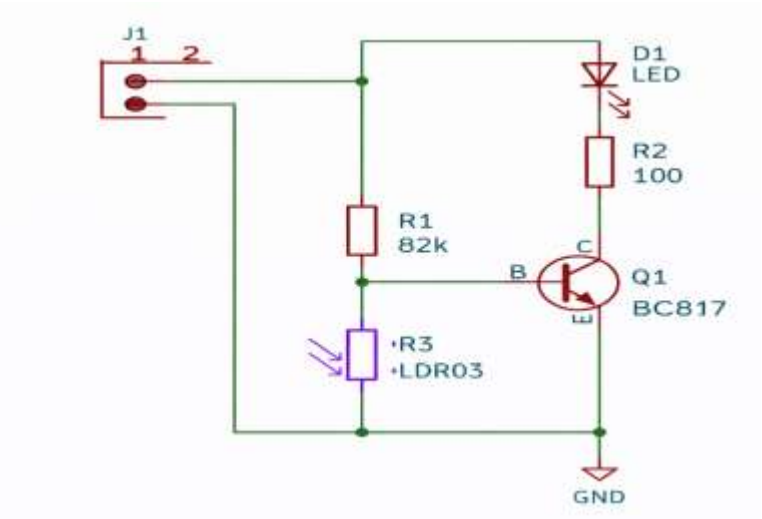

Fig: Block Diagram

The circuit diagram of the LDR Based Automatic Night Light System illustrates the connection of all the electronic components used in the project. The main components in the circuit include a Light Dependent Resistor (LDR), two resistors (R1 and R2), an NPN transistor (BC817-40), an LED, and a DC power supply connector.

In the circuit, the LDR and resistor R1 (82 kΩ) form a voltage divider network that controls the base voltage of the transistor. The transistor acts as a switching device that regulates the current flowing through the LED. The LED is connected in series with resistor R2 (100 Ω), which acts as a current-limiting resistor to protect the LED from excessive current.

The collector terminal of the transistor is connected to the LED, while the emitter terminal is connected to ground. The base terminal receives the control voltage from the voltage divider formed by the LDR and resistor. The power supply is provided through a DC input connector, which supplies the required voltage to operate the circuit.

This configuration allows the transistor to switch the LED ON or OFF depending on the light intensity detected by the LDR. The circuit diagram was designed using KiCad schematic editor, which enabled proper component placement and electrical connections before proceeding to PCB design.

Working Principle

The LDR Based Automatic Night Light System works on the principle of variation in resistance of the Light Dependent Resistor (LDR) with respect to the intensity of light falling on it. The LDR acts as the sensing element that detects the surrounding light conditions and controls the operation of the LED accordingly.

In this circuit, the LDR and resistor R1 (82 kΩ) form a voltage divider network which controls the base voltage of the NPN transistor (BC817-40). The transistor functions as a switching device that regulates the flow of current through the LED.

During bright light conditions (daytime), sufficient light falls on the LDR, causing its resistance to become very low. Due to this low resistance, the voltage applied to the base of the transistor becomes insufficient to turn the transistor ON. As a result, the transistor remains in the cut-off region, and no current flows through the LED. Therefore, the LED remains OFF.

During low light conditions or nighttime, the amount of light falling on the LDR decreases, which increases its resistance significantly. This increase in resistance causes the voltage at the base of the transistor to rise. When the base voltage becomes sufficient to forward-bias the transistor, it turns ON and operates in the saturation region.

When the transistor turns ON, current flows from the power supply through the LED and the current limiting resistor R2 (100 Ω) and then through the collector-emitter path of the transistor to ground. This allows the LED to glow, indicating that the surrounding environment is dark.

Thus, the circuit automatically switches the LED ON during dark conditions and OFF during bright conditions, enabling automatic control of lighting based on ambient light intensity.

COMPONENTS REQUIRED / USED

The LDR Based Automatic Night Light System uses a few basic electronic components to sense the ambient light intensity and control the LED automatically. The details of the components used in the circuit along with their specifications are given below.

Table 1: Required Components

Sl. No	Component	Specification
1	Light Dependent Resistor (LDR)	LDR03 Photoresistor
2	Transistor	BC817-40 (NPN)
3	LED	Standard indicator LED
4	Resistor R1	82 kΩ
5	Resistor R2	100 Ω
6	DC Power Connector	2-Pin connector
7	Power Supply	5V DC

The following components are used in the LDR Based Automatic Night Light System**.** Each component plays an important role in the operation of the circuit.

1. Light Dependent Resistor (LDR)

A Light Dependent Resistor (LDR) is a type of photoresistor whose resistance varies according to the intensity of light falling on its surface. When the surrounding light intensity is high, the resistance of the LDR becomes low. When the light intensity decreases, its resistance increases significantly. In this project, the LDR is used as a to detect day and night conditions and control the switching of the LED. light sensing element.

Fig: LDR03 Photoresistor

2. Transistor (BC817-40)

The BC817-40 is an NPN bipolar junction transistor used as a switching device in this circuit. It controls the flow of current through the LED based on the voltage applied to its base terminal. When the base receives sufficient voltage from the voltage divider network, the transistor turns ON and allows current to pass from collector to emitter, which turns the LED ON.

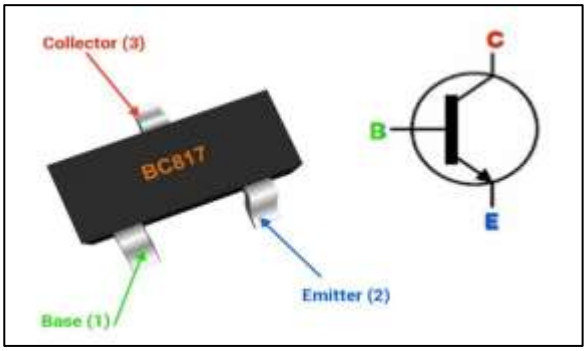

Fig: BC817-40

3. Light Emitting Diode (LED)

Light Emitting Diode (LED) is a semiconductor device that emits light when an electric current passes through it. In this project, the LED acts as the output indicator of the circuit. It glows when the circuit detects low light conditions, indicating that the system has switched ON during night time.

Fig: LED

4. Resistor R1 (82 kΩ) & R2 (100 Ω)

The 82 kΩ resistor is used along with the LDR to form a voltage divider network. This network determines the voltage applied to the base of the transistor. The change in resistance of the LDR causes a corresponding change in the base voltage of the transistor.

The 100 Ω resistor is connected in series with the LED and acts as a current-limiting resistor. Its purpose is to restrict the amount of current flowing through the LED to prevent damage and ensure safe operation of the LED.

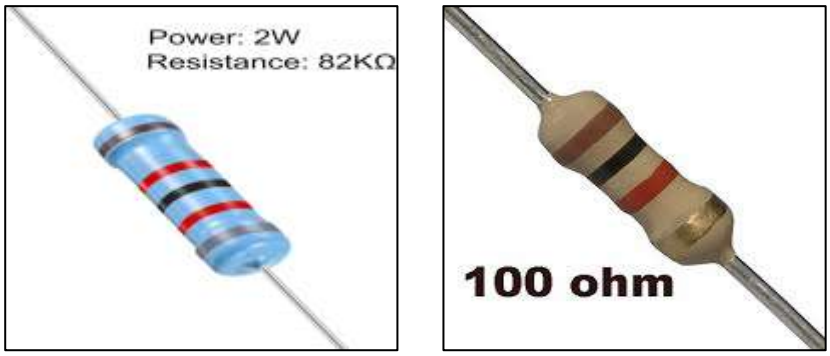

Fig: Resistors (82 kΩ & 100 Ω)

6. Power Supply

A DC power supply (5V) is used to provide the necessary electrical power to operate the circuit. The power supply is connected through a 2-pin connector in the circuit.

Fig: 2 Pin Male Connector

PCB Design Using KiCad

The Printed Circuit Board (PCB) for the LDR Based Automatic Night Light System was designed using KiCad, an open-source Electronic Design Automation (EDA) software widely used for schematic design and PCB layout development.

The PCB design process involved several stages, starting from schematic creation to the generation of manufacturing files. The steps followed during the PCB design process are described below.

1. Schematic Design

The first step in the design process was creating the circuit schematic using the KiCad Schematic Editor. All the required components such as the LDR, resistors, transistor (BC817-40), LED, and power connector were placed in the schematic workspace and connected according to the circuit design.

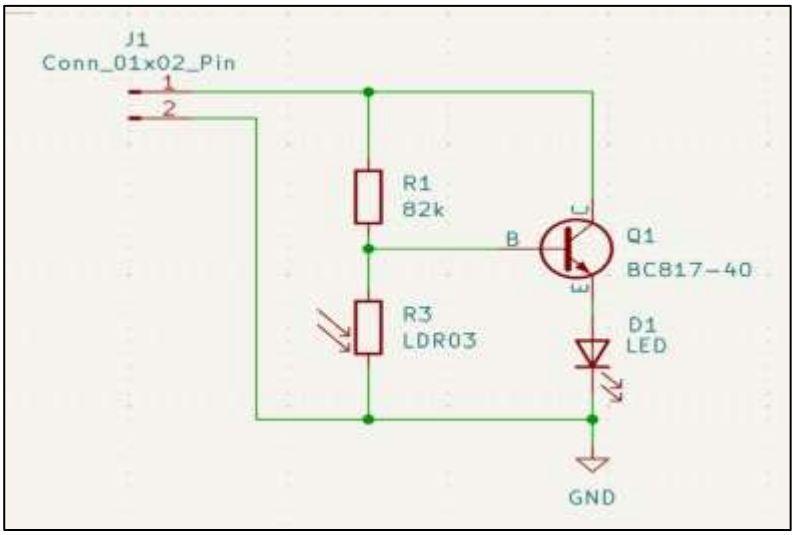

Fig : Schematic Design

2. Footprint Assignment

After completing the schematic design, appropriate PCB footprints were assigned to each component. A footprint represents the physical layout of a component on the PCB and defines the pad arrangement required for soldering the component onto the board.

Assigning the correct footprints ensures that the actual electronic components can be mounted properly during PCB fabrication and assembly.

3. PCB Layout Design

Once the footprints were assigned, the schematic was transferred to the KiCad PCB Editor**.** In this stage, all the components were placed on the PCB board in suitable positions. Electrical connections between the components were created using copper tracks.

rCare was taken to arrange the components properly and route the tracks clearly to ensure a neat and functional PCB layout.

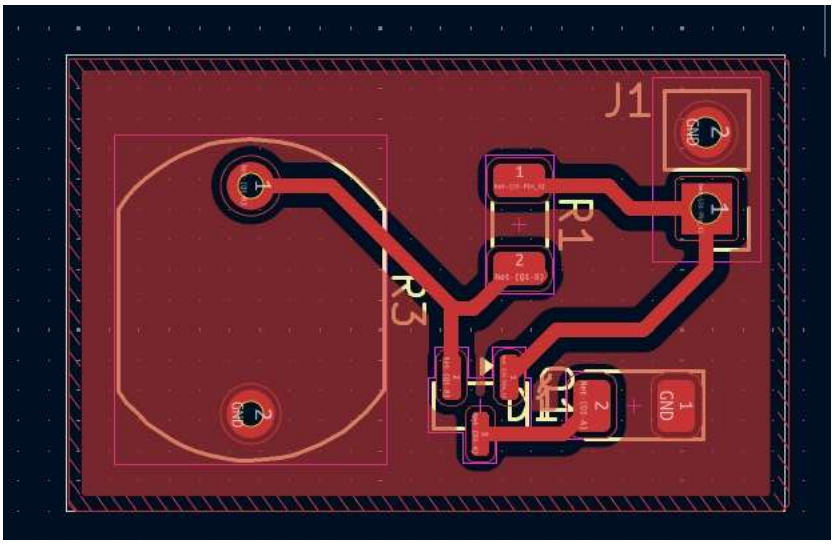

Fig: PCB Layout

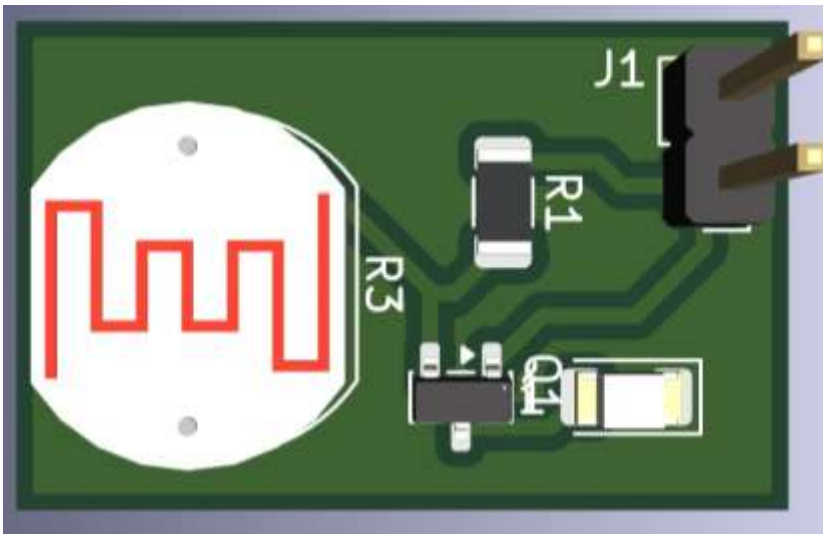

Fig: 3D View

4. Design Rule Check (DRC)

A Design Rule Check (DRC) was performed to verify that the PCB layout followed the required design rules such as minimum track spacing, pad clearance, and proper connectivity. This step helps to identify and correct any design errors before fabrication.

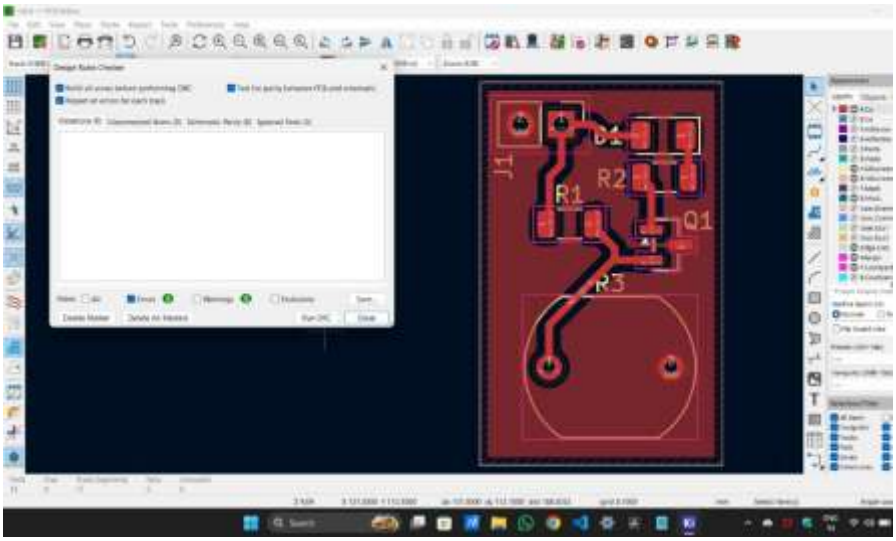

Fig: DRC

5. Gerber File Generation

After verifying the PCB design, Gerber files were generated from KiCad. These files contain all the necessary information required for manufacturing the printed circuit board, including copper layers, drill files, and board outline.

➢ Advantages

The LDR Based Automatic Night Light System offers several advantages, making it useful for simple automatic lighting applications. Some of the important advantages are:

- **Automatic operation:** The system automatically turns the light ON during dark conditions and OFF during bright conditions without manual control.
- **Energy saving:** It reduces unnecessary power consumption by ensuring that lights operate only when required.
- **Simple circuit design:** The circuit uses a small number of basic electronic components, making it easy to design and implement.
- **Low cost:** The components used in the circuit are inexpensive and easily available.

- **Easy maintenance:** Due to the simple design, the circuit is easy to maintain and troubleshoot.
- **Reliable operation:** The use of a transistor as a switching device ensures stable and reliable performance.

➢ Applications

The **LDR Based Automatic Night Light System** can be used in various places where automatic control of lighting is required. By sensing the surrounding light intensity, the system helps in operating lights only when necessary. Some of the important applications are:

- **Automatic street lighting systems**, where lights turn ON automatically during night and OFF during daytime.
- **Garden and pathway lighting**, to provide illumination during dark conditions without manual switching.
- **Corridor and staircase lighting** in residential or commercial buildings.
- **Outdoor security lighting**, where lights automatically turn ON when the surrounding environment becomes dark.
- **Parking area lighting**, helping to maintain visibility during nighttime.
- **Smart home lighting systems**, where automatic light control improves convenience and energy efficiency.

❖ ATTACHED LINKS

- ➢ KiCad File
- ➢ GitHub Repository

CONCLUSION

The LDR Based Automatic Night Light System was successfully designed to automatically control lighting based on the surrounding light intensity. The system uses a Light Dependent Resistor (LDR) to sense the ambient light conditions and an NPN transistor (BC817-40) to switch the LED accordingly. When the surrounding light intensity decreases, the circuit automatically turns the LED ON, and when the light intensity increases, the LED turns OFF.

The circuit was designed using KiCad**,** where the schematic diagram was created, footprints were assigned to the components, and the PCB layout was developed. This project demonstrates a simple, cost-effective, and efficient method for implementing automatic lighting systems.

By ensuring that lights operate only when necessary, the system helps **in** reducing unnecessary energy consumption, thereby supporting Sustainable Development Goal 7 (Affordable and Clean Energy). The project highlights the practical application of basic electronic components in developing smart and energy-efficient lighting solutions.
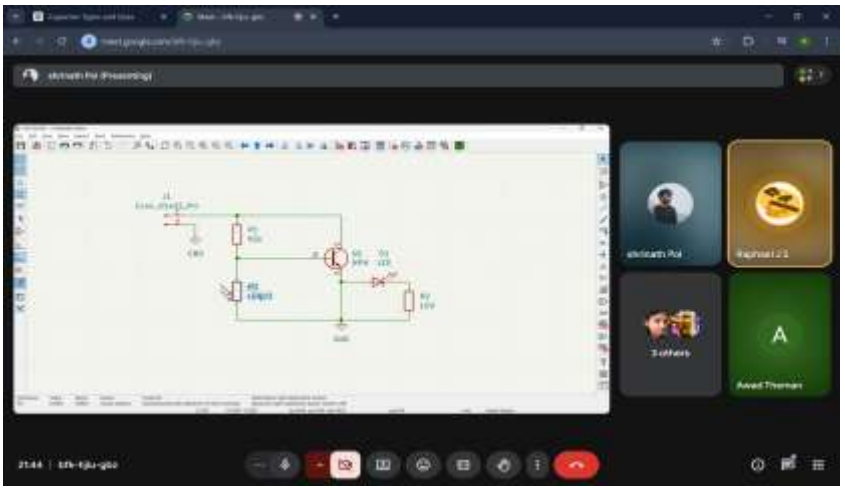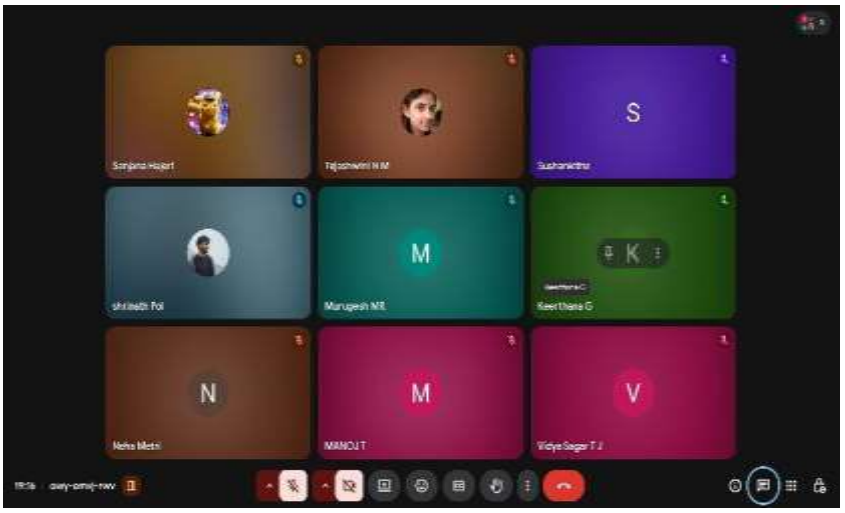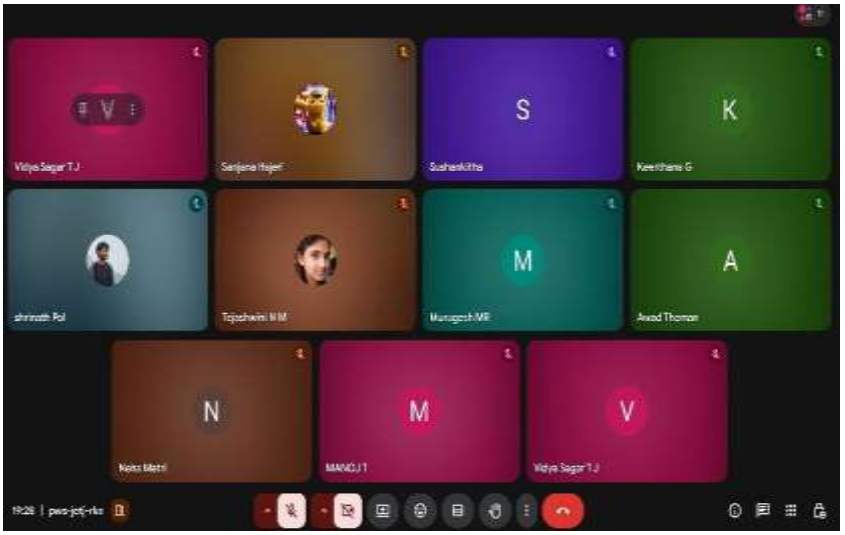
PROJECT DISCUSSION